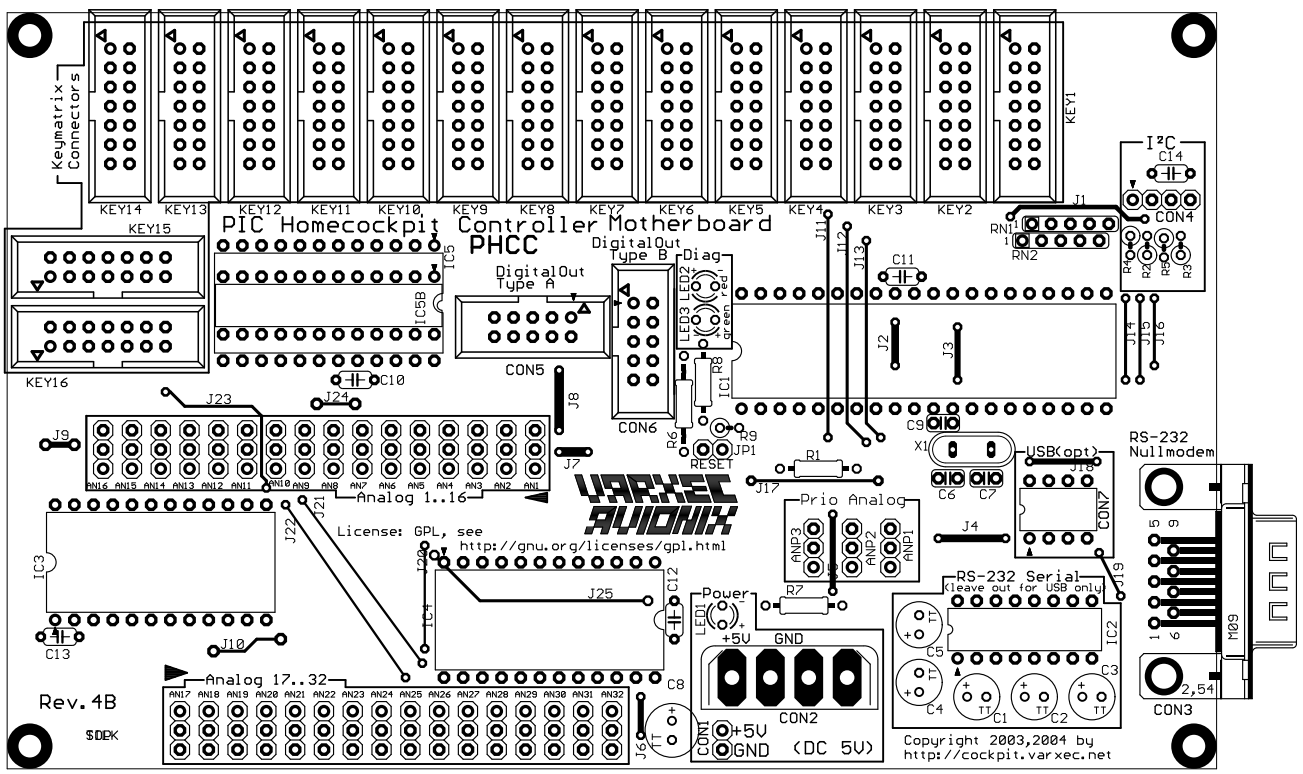

Keymatrix Connectors
KEY14
KEY13
KEY12
KEY11
KEY10
KEY9
KEY8
KEY7
KEY6
KEY5
KEY4
KEY3
KEY2
KEY1
KEY15
KEY16
PIC Homecockpit Controller Motherboard
PHCC
DigitalOut Type A
DigitalOut Type B
Diag
CON5
CON6
IC5
IC5B
IC1
IC2
IC3
IC4
IC5
IC6
IC7
IC8
IC9
IC10
IC11
IC12
IC13
IC14
J1
J2
J3
J4
J7
J8
J9
J10
J11
J12
J13
J14
J15
J16
J17
J18
J19
J20
J21
J22
J23
J24
J25
C1
C2
C3
C4
C5
C6
C7
C8
C9
C10
C11
C12
C13
C14
RN1
RN2
R1
R2
R3
R4
R5
R6
R7
R8
R9
JP1
RESET
X1
USB(opt)
CON7
I²C
CON4
RS-232 Nullmodem
CON3
M09
2,54
Analog 1..16
Analog 17..32
Prio Analog
ANP1
ANP2
ANP3
Power
LED1
LED2
LED3
+5V
GND
CON1
CON2
(DC 5V)
RS-232 Serial
(leave out for USB only)
Rev.4B
License: GPL, see
http://gnu.org/licenses/gpl.html
Copyright 2003,2004 by
http://cockpit.varxec.net